MOTOROLA

HPD™ 1000 MODEM

User's Guide

HPD™ 1000 Modem

Quick Reference Card

Product Safety and RF Exposure Compliance

Caution

Before using this product, read the operating instructions for safe usage contained in the Product Safety and RF Exposure booklet enclosed with your radio.

ATTENTION!

This modem is restricted to occupational use only to satisfy FCC RF energy exposure requirements. Before using this product, read the RF energy awareness information and operating instructions in the Product Safety and RF Exposure booklet enclosed with your radio (Motorola Publication part number 6881095C99) to ensure compliance with RF energy exposure limits.

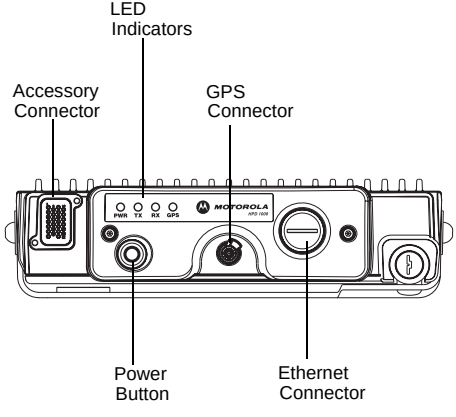

BASIC OPERATION

Reset Modem

Click this button on the status applet to restart the HPD Modem.

Change IP Address

1 Click Change.
2 Key in new IP address and click Change once more.

LED INDICATIONS

Action	*LED*	*Condition*
Power OFF	-	-
GPS OFF	-	-
Power ON	LED 1	FLASHING GREEN
Programming test	LED 1	FLASHING AMBER
Insufficient voltage/current	LED 1	RED
Power ON - Self Test failure	LED 1- 4	RED
Channel - Tx	LED 2	FLASHING GREEN
Out of range	LED 2 & 3	RED
Searching for Data Channel	LED 2 & 3	FLASHING RED
Channel - Rx	LED 3	FLASHING GREEN
GPS ON	LED 4	GREEN
GPS ON - Assisted Mode	LED 4	AMBER
GPS ON - Searching for signal	LED 4	FLASHING RED
GPS Error/Failure	LED 4	RED

Product Safety and RF Exposure Compliance

Caution

Before using this product, read the operating instructions for safe usage contained in the Product Safety and RF Exposure booklet enclosed with your radio.

ATTENTION!

This radio is restricted to occupational use only to satisfy FCC RF energy exposure requirements. Before using this product, read the RF energy awareness information and operating instructions in the Product Safety and RF Exposure booklet enclosed with your radio (Motorola Publication part number 6881095C99) to ensure compliance with RF energy exposure limits.

Computer Software Copyrights

The Motorola products described in this manual may include copyrighted Motorola computer programs stored in semiconductor memories or other media. Laws in the United States and other countries preserve for Motorola certain exclusive rights for copyrighted computer programs, including, but not limited to, the exclusive right to copy or reproduce in any form the copyrighted computer program. Accordingly, any copyrighted Motorola computer programs contained in the Motorola products described in this manual may not be copied, reproduced, modified, reverse-engineered, or distributed in any manner without the express written permission of Motorola. Furthermore, the purchase of Motorola products shall not be deemed to grant either directly or by implication, estoppel, or otherwise, any license under the copyrights, patents or patent applications of Motorola, except for the normal non-exclusive license to use that arises by operation of law in the sale of a product.

Documentation Copyrights

No duplication or distribution of this document or any portion thereof shall take place without the express written permission of Motorola. No part of this manual may be reproduced, distributed, or transmitted in any form or by any means, electronic or mechanical, for any purpose without the express written permission of Motorola.

Disclaimer

The information in this document is carefully examined, and is believed to be entirely reliable. However, no responsibility is assumed for inaccuracies. Furthermore, Motorola reserves the right to make changes to any products herein to improve readability, function, or design. Motorola does not assume any liability arising out of the applications or use of any product or circuit described herein; nor does it cover any license under its patent rights, nor the rights of others.

MOTOROLA, the Stylized M Logo, HPD and FLASHport are registered in the U.S. Patent & Trademark Office. All other product or service names are the property of their respective owners. P25 radios contain technology patented by Digital Voice Systems, Inc.

© Motorola, Inc. 2006. All Rights Reserved.

Notations Used in This Manual

Throughout the text in this publication, you will notice the use of WARNINGS, CAUTIONS, and Notes. These notations are used to emphasize that safety hazards exist, and care that must be taken or observed.

WARNING

WARNING: An operational procedure, practice, or other condition, which might result in injury or death if not carefully observed.

CAUTION

CAUTION: An operational procedure, practice, or other condition, which might result in damage to the equipment if not carefully observed.

Note:

Note: An operational procedure, practice, or other condition, which is essential to emphasize.

Contents

Computer Software Copyrights ii
Documentation Copyrights ii
Disclaimer ii
Notations Used in This Manual iii

Getting Started 1
Software Installation and Setup 2
Important Installation Information for HPD Status Applet 2
HPD Status Applet Installation 3
Finishing the installation 4

Status Applet and Features 5
Status Applet Window 5
Features 6
MSU IP Address 6
Indicator lights description 7
Out of range 9
Power Management 10

General Modem Features 13
Location Services Offered 13
GPS Functionality 14

Accessories 17
Antennas 17
Cables 17
Trunnion Kits 18

Glossary 19

Commercial Warranty and Service 21
Limited Warranty 21
Service 25

Notes

Getting Started

The Motorola HPD 1000 Modem is a sophisticated, mobile modem pioneering the latest technology in radio electronics.

The HPD 1000 Modem provides connectivity between a vehicle-mounted data device and a host computer through Motorola's High Performance Data (HPD) radio network. The modem connects to a data device via USB or Ethernet and is designed to support data transfer speeds of 32 kbps, 64kbps or 96 kbps within the 700/800 MHz frequency bands. The modem’s integrated GPS receiver allows the user to determine the current location of a mobile HPD modem when used in conjunction with a GPS location application. Location alone, or combined with other information about the environment (e.g. a map), enables value-added applications such as tracking of resources.

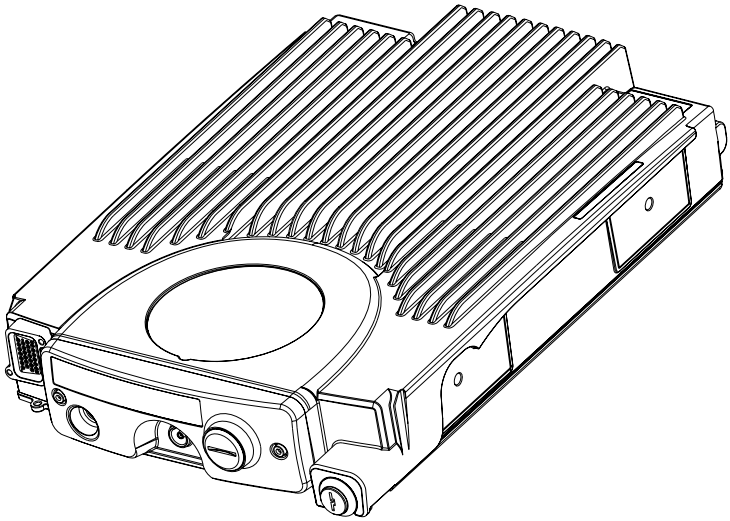

Software Installation and Setup

Important Installation Information for HPD Status Applet

Do not plug in the modem before installing the HPD Status Applet. If this is done, the HPD modem will fail to install properly.

System Requirements: Windows XP Service Pack 1 or Windows 2000 Service Pack 3.

Installation criteria:

1. Install .Net 1.1 Common Language Runtime (CLR). If this is not installed, the HPD Status Applet Installation will install it on your machine automatically.
2. Microsoft .NET Framework 1.1 Service Pack 1 (NDP1.1sp1-KB867460-X86.exe) must be installed, which is included on the CD. This can only be installed **AFTER** .Net 1.1 CLR is installed. If the Service Pack is not installed when you attempt to install the Status Applet, the installation will stop and inform the user to install the Service Pack.
3. Ensure SNMP is installed and running:
   - Open "Services" (found under Administrative Tools) to make sure SNMP Trap Services installed properly and is running with "Automatic" startup type.
   - If SNMP Trap Service is not installed, it must be installed using Add/Remove Windows Components. The actual component that the user needs to install is the Simple Network Management Protocol, which can be found under “Management and Monitoring Tools. This will usually prompt the user to insert a Windows XP CD.

HPD Status Applet Installation

1. Double-click setup
2. Welcome Screen appears. Click **Next**.
3. Release Notes Screen is accessed. Click **Yes** to progress or **No** to exit installation.
4. Destination Directory Screen appears. You can configure the location where the files will be installed. Select the path of where the Application Framework (the exe. file) will be installed. The default path is C:\Program Files\Motorola\HPD\Status Applet. Once path has been configured, click **Next**.
5. Configuration Screen appears.
   You need to key in Modem IP Address
   (Default: 192.168.128.1).
   Choose either PPP or PPPoE (Default: PPP).
   The PPPoE is only available to Windows XP users.
   Click the checkered box if you want the Status Applet to automatically start whenever Windows starts up.
   Click **Next.**
6. 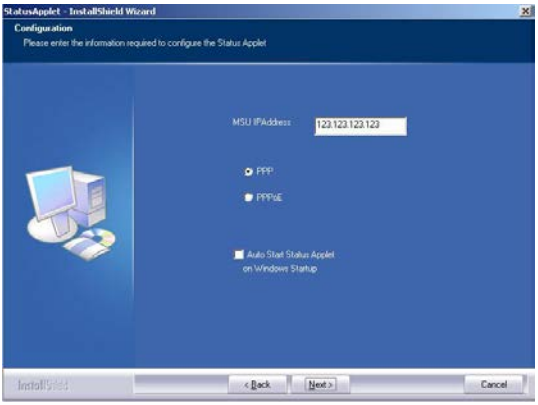

7. Installation Complete.

Finishing the installation

1. Plug in the HPD Modem
2. The Found New Hardware Wizard will appear. Select **Install the software automatically**.
3. A message box appears stating that the hardware “has not passed Windows Logo testing”.
   Click **Continue Anyway**.

Status Applet and Features

The Status Applet is an interface that provides you with data on the settings for the HPD modem. You are given the ability to change the MSU IP Address as well as the option to reset the modem.

Status Applet Window

Once the Status Applet opens, use the navigation tree to open the applet. The navigation tree operates in the same way as the Microsoft Windows navigation trees.

To open an applet, click on the applet name.

To expand a folder, click the "+" symbol, and to compress a folder, click the "-" symbol.

Multiple Applets can be opened at the same time.The Status Applet Window shows you the various information about the current settings of the HPD modem.

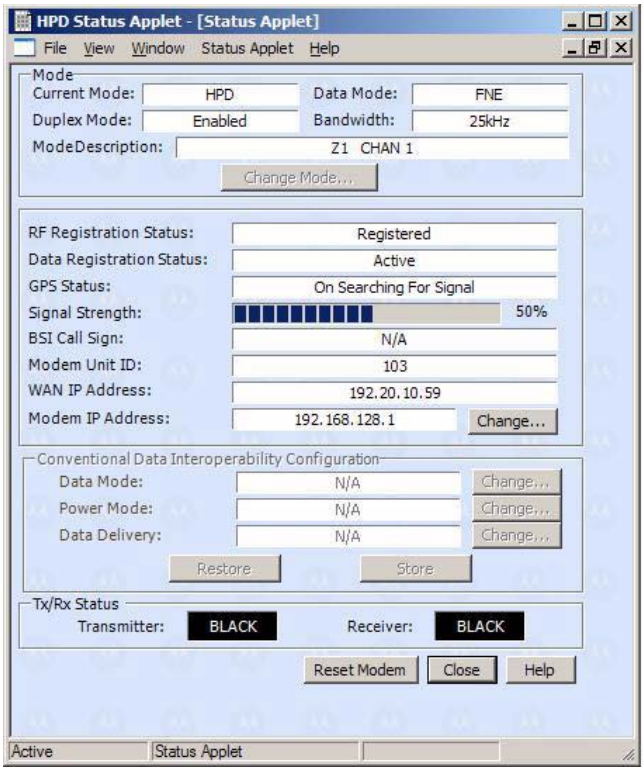

Features

You can do the following:

- Change Modem IP Address - This will open the Change Modem IP Address Window, which will allow you to change the current Modem IP Address of the HPD Modem.
- Reset Modem - Clicking this button will restart the HPD Modem. The connection between the PC Applets Suite and the HPD Modem will temporarily be broken.

MSU IP Address

On this window, you can change the IP Address of the HPD modem.
.

Make sure the IP address is in valid range from 0.0.0.0 to 255.255.255.255.

Click **Change** to use new IP address or click **Cancel** to retrn to the main window.

Note: In order for the new IP Address to take effect, the HPD Modem must be reset.

Indicator lights description

The User Interface Panel (UIP) contains four LED's which display the current function of the radio. The LED's represent the current status of the GPS, transmitter, receiver and power of the radio. Various colors are used to represent modes of the current state of the radio. The LED colors can be red, green or amber with the capability to flash on and off. Below are charts showing all the functions and LED color configurations of the radio.

Power-up / Modem status

Description	*LED 1 Pwr/Prg*	*LED 2 Transmit*	*LED 3 Receive*	*LED 4 GPS*
Power OFF				
Power problem - Insufficient voltage or current	RED			
Power-ON self test failure	RED	RED	RED	RED
Programming test	Flashing AMBER			
Power ON	Flashing GREEN			

Receiving/Transmitting

Description		*LED 1 Pwr/Prg*	*LED 2 Transmit*	*LED 3 Receive*	*LED 4 GPS*
HPD Channel	Tx Activity		Flashing GREEN		
	Rx Activity			Flashing GREEN	
Out of Range or Registeration Denied			RED	RED	
Searching for Data Channel			Flashing RED	Flashing RED	

GPS Status

Description	*LED 1 Pwr/Prg*	*LED 2 Transmit*	*LED 3 Receive*	*LED 4 GPS*
GPS OFF				
GPS ON - Autonomous				GREEN
GPS ON - Assisted Mode				AMBER
GPS ON - Searching for Signal				Flashing RED
GPS Error/Failure				RED

Note: The GPS LED is off due to the following reasons:

- GPS feature not purchased
- GPS feature purchased but disabled
- Modem is in 700 MHz conventional interoperability mode

Out of range

In out of range condition, both the Status Applet's transmit and receive indicators both will go red (non-flashing).

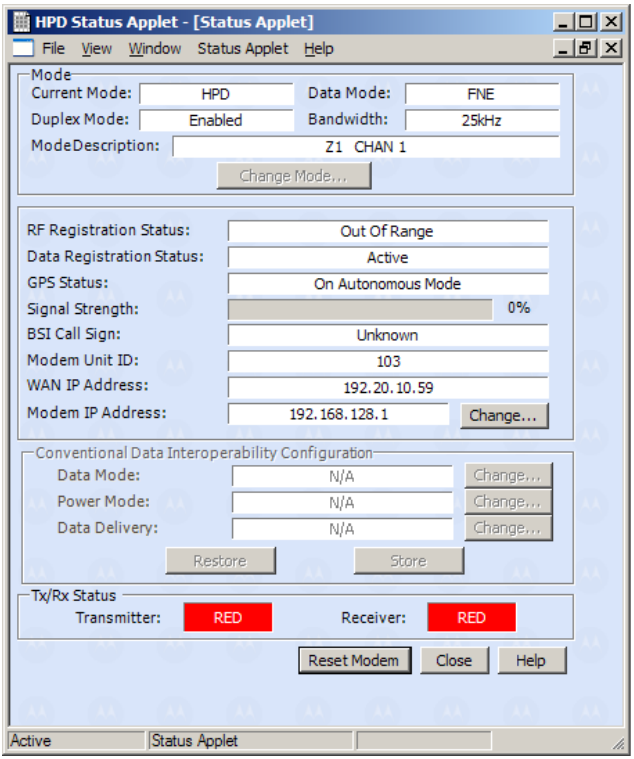

Power Management

There are four available ways to control the ON/OFF cycle for HPD:

- Computer Communication Cable (USB or Ethernet or Both)
- Front Button Press
- Ignition
- Battery Voltage Level

Note: ONLY Igniton and Battery Voltage are required conditions for the other two to work.

Assuming Ignition is attached to the car's ignition and the Car's ignition is in the **ON** position, and the power cable is attached to a fully charged Battery, then the following is true:

1 Your Modem will turn **ON** and stay **ON** when a Communication Cable is connected between a powered-up computer (includes standby or sleep modes) with the HPD modem.

2 Your modem will turn **ON** and stay **ON** with the press of the Power Button even If there is no Communication Cable attached or the computer is OFF (or in hibernation mode).

3 If your Modem was turned on via a Power Button Press (without an active Communication Cable attached), it can be turned **OFF** via a subsequent Button Press.

Note: This occurs ONLY after your modem has initialized and showing a flashing green LED, which is about 6 seconds after the initial button press.

4 If an active Communication Cable is attached after your modem was turned on via a button Press (without an active Communication Cable attached), it will remain **ON** from any subsequent button presses.

Note: Your modem will only turn **OFF** either by removing the communication cable or turning the computer off.

5. Any disconnect of a Communication Cable or turning the computer **OFF**, will cause HPD to start an off period of 6 seconds before it finally turns off. If the cable is re-attached or the computer is turned back **ON** during these 6 seconds, HPD will remain on.
6. If the Car Battery Voltage drops below 10V, the modem will turn **OFF** and stay **OFF** until Battery voltage is above 10V again.
7. If Ignition is removed, HPD will turn **OFF**.

Notes

General Modem Features

This section contains information associated with the basic features that is offered by your HPD 1000 modem.

Location Services Offered

The personnel location tracking service allows the radio user and location application servers to determine the current location of a mobile HPD radio. Location alone or combined with other information about the environment (e.g. a map) enables value-added applications such as tracking of resources.

With the GPS feature, it is possible to enable or disable the location service of an Subscriber Unit using CPS. When completely disabled, no location services will be available. Any requests sent to the location information port on an Subscriber unit will result in a “port unreachable” message to the location application.

GPS Services are available only on HPD radios for which a customer has purchased the GPS feature.

Note: The location service feature is not available when the HPD radio is in 700MHz , APCO conventional interoperability mode.

Any requests sent to the location information while operating in 700MHz conventional interoperability mode will result in a “port unreachable” message to the location application.

The location service does **NOT** provide a way for the radio user to trigger a location update to a location application server.

Note: Location information from the HPD radio is not available to the mobile computer connected to the HPD radio in this release.

The following list are some services provided to a Radio User and Location Application Server:

- Location service on/off control.
- maximum number of stored location requests.
- location status indication via the front-panel LEDs.
- single location updates and periodic location updates.

For Location Status Indicators, refer to “GPS Status” on page 8 to send your page.

GPS Functionality

The GPS signals are received by an external active antenna connected to the HPD radio. The on-board PGAM GPS hardware searches the satellite’s unique Coarse Acquisition (C/A) code in the received signal by shifting and correlating the C/A code of a satellite with the received signal. This is repeated for all the satellites until the receiver has found at least 3 or 4 satellites.

The acquisition of location data is done by the PGAM hardware inside the HPD radio. The acquisition is dependent on the PGAM hardware receiving sufficient and proper signals from the Global Positioning System (GPS) satellites.

Under cold start conditions, the firmware that executes on the PGAM hardware has to be downloaded to the hardware.This takes 2 minutes. The PGAM hardware may take up to 5 additional minutes to acquire a proper signal from the GPS satellites in open sky conditions.Under warm start and open sky conditions, the PGAM hardware may take up to 1 minute to acquire a proper signal from the GPS satellites.

Note: Cold start conditions will apply if the HPD radio is being turned on for the very time or if the HPD radio is disconnected from its power source (usually a vehicle battery) and reconnected. Warm start conditions will apply if the HPD radio had previously acquired location information

successfully, and was shut down and re-started without disconnecting the radio from its power source.

The PGAM GPS hardware always operates in “**autonomous continuous acquisition mode**” when the HPD radio is powered on.

Autonomous implies that you do not need to supply any assistance data from an external source to the PGAM GPS hardware.

Continuous acquisition means that the PGAM GPS hardware is set up to acquire location information periodically.

When the HPD modem is powered **OFF**, the PGAM GPS hardware is put into low power mode. It stops attempting to acquire location information periodically. However, it retains GPS information that helps reduce the GPS signal acquisition time when the HPD modem is powered backed on (warm start conditions).

Note: Power is always supplied to the GPS hardware unless the modem is totally disconnected from it's power source. A small amount of current is drawn during this period.

Notes

Accessories

Motorola provides the following approved accessories to improve the productivity of your HPD 1000 Modem.

For a list of Motorola-approved antennas, batteries, and other accessories, visit the following web site which lists approved accessories: http://www.motorola.com/governmentandenterprise

Antennas

HAF4013_	764–870 MHz, 3db, low profile
HAF4014_	764–870 MHz, 3db, elevated feed
HAF4016_	764–870 MHz, quarterwave, roof mount
HAF4017_	764–870 MHz, 3db, Collinear
HLN6962_	GPS Antenna

Cables

HKN6197_	Power cable, HPD 15A
HKN6177_	USB Data Cable w/ Ignition Sense, 1.5m
HKN6178_	Data Cable, USB w/ Ignition Sense 4.5m
HKN6179_	Data Cable, USB w/ Ignition Sense 4.5 m and 2 screws
HKN6175_*	Data Cable 10’, Ethernet
HKN6176_*	Data Cable 20’, Ethernet
HKN6174_	Ignition Sense Cable, 10'
HKN6173_	Ignition Sense Cable, 20'
HKN6180A	RS232 Data Cable

** Ethernet cables need an ignition sense cable for HPD Modem to function.*

Trunnion Kits

HLN6920_	HPD Installation Hardware

Glossary

Channel	A group of characteristics, such as transmit/ receive frequency pairs, radio parameters, and encryption encoding.
Cursor	A visual tracking marker (a blinking line) that indicates a location on the display.
Dispatcher	An individual who has radio system management duties.
Ethernet	A local-area network (LAN) architecture developed by Xerox Corporation in cooperation with DEC and Intel in 1976. Ethernet uses a bus or star topology and supports data transfer rates
EEPROM	**E**lectrically **E**rasable **P**rogrammable **R**ead-**O**nly **M**emory. A special type of PROM that can be erased by exposing it to an electrical charge. An EEPROM retains its contents even when the power is turned off.
FCC	**F**ederal **C**ommunications **C**ommission.
FLASHport	A Motorola term that describes the ability of a radio to change memory. Every FLASHport radio contains a FLASHport EEPROM memory chip that can be software written and rewritten to, again and again.
GPS	Global Positioning Satellite
Hang Up	Disconnect.
HPD	High Performance Data
LCD	**L**iquid-**C**rystal **D**isplay.
Mode	A programmed combination of operating parameters.

PGAM	**P**hoenix **G**PS **A**cquisition **M**odule, the internal GPS hardware used on the HPD radio
PPP	**P**oint-to-**P**oint **P**rotocol A method of connecting a computer to the Internet.
PPPoE	**P**oint-to-**P**oint **P**rotocol **o**ver **E**thernet. A specification for connecting the users on an Ethernet to the Internet through a common broadband medium.
RF	**R**adio **F**requency. A part of the general frequency spectrum between the audio and infrared light regions (about 10 kHz to 10,000,000 MHz).
RX	Receive.
TX	Transmit.
UHF	Ultra-High Frequency.
USB	Universal Serial Bus An external bus standard that supports data transfer rates of 12 Mbps.
VHF	Very-High Frequency.

Commercial Warranty and Service

Limited Warranty

MOTOROLA COMMUNICATION PRODUCTS

I. WHAT THIS WARRANTY COVERS AND FOR HOW LONG:

MOTOROLA INC. (“MOTOROLA”) warrants the MOTOROLA manufactured Communication Products listed below (“Product”) against defects in material and workmanship under normal use and service for a period of time from the date of purchase as scheduled below:

HPD™ 1000 Modem	One (1) Year
Product Accessories	One (1) Year

Motorola, at its option, will at no charge either repair the Product (with new or reconditioned parts), replace it (with a new or reconditioned Product), or refund the purchase price of the Product during the warranty period provided it is returned in accordance with the terms of this warranty. Replaced parts or boards are warranted for the balance of the original applicable warranty period. All replaced parts of Product shall become the property of MOTOROLA.

This express limited warranty is extended by MOTOROLA to the original end user purchaser only and is not assignable or transferable to any other party. This is the complete warranty for the Product manufactured by MOTOROLA. MOTOROLA assumes no obligations or liability for additions or modifications to this warranty unless made in writing and signed by an officer of MOTOROLA. Unless made in a separate agreement between MOTOROLA and the original end user purchaser, MOTOROLA does not warrant the installation, maintenance or service of the Product.

MOTOROLA cannot be responsible in any way for any ancillary equipment not furnished by MOTOROLA which is attached to or used in connection with the Product, or for operation of the Product with any ancillary equipment, and all such equipment is expressly excluded from this warranty. Because each system which may use the Product is unique, MOTOROLA disclaims liability for range, coverage, or operation of the system as a whole under this warranty.

II. GENERAL PROVISIONS:

This warranty sets forth the full extent of MOTOROLA'S responsibilities regarding the Product. Repair, replacement or refund of the purchase price, at MOTOROLA’s option, is the exclusive remedy. THIS WARRANTY IS GIVEN IN LIEU OF ALL OTHER EXPRESS WARRANTIES. IMPLIED WARRANTIES, INCLUDING WITHOUT LIMITATION, IMPLIED WARRANTIES OF MERCHANTABILITY AND FITNESS FOR A PARTICULAR PURPOSE, ARE LIMITED TO THE DURATION OF THIS LIMITED WARRANTY. IN NO EVENT SHALL MOTOROLA BE LIABLE FOR DAMAGES IN EXCESS OF THE PURCHASE PRICE OF THE PRODUCT, FOR ANY LOSS OF USE, LOSS OF TIME, INCONVENIENCE, COMMERCIAL LOSS, LOST PROFITS OR SAVINGS OR OTHER INCIDENTAL, SPECIAL OR CONSEQUENTIAL DAMAGES ARISING OUT OF THE USE OR INABILITY TO USE SUCH PRODUCT, TO THE FULL EXTENT SUCH MAY BE DISCLAIMED BY LAW.

III. STATE LAW RIGHTS:

SOME STATES DO NOT ALLOW THE EXCLUSION OR LIMITATION OF INCIDENTAL OR CONSEQUENTIAL DAMAGES OR LIMITATION ON HOW LONG AN IMPLIED WARRANTY LASTS, SO THE ABOVE LIMITATION OR EXCLUSIONS MAY NOT APPLY.

This warranty gives specific legal rights, and there may be other rights which may vary from state to state.

IV. HOW TO GET WARRANTY SERVICE:

You must provide proof of purchase (bearing the date of purchase and Product item serial number) in order to receive warranty service and, also, deliver or send the Product item, transportation and insurance prepaid, to an authorized warranty service location. Warranty service will be provided by Motorola through one of its authorized warranty service locations. If you first contact the company which sold you the Product, it can facilitate your obtaining warranty service. You can also call Motorola at 1-888-567-7347 US/Canada.

V. WHAT THIS WARRANTY DOES NOT COVER:

A) Defects or damage resulting from use of the Product in other than its normal and customary manner.

B) Defects or damage from misuse, accident, water, or neglect.

C) Defects or damage from improper testing, operation, maintenance, installation, alteration, modification, or adjustment.

D) Breakage or damage to antennas unless caused directly by defects in material workmanship.

E) A Product subjected to unauthorized Product modifications, disassemblies or repairs (including, without limitation, the addition to the Product of non-Motorola supplied equipment) which adversely affect performance of the Product or interfere with Motorola's normal warranty inspection and testing of the Product to verify any warranty claim.

F) Product which has had the serial number removed or made illegible.

G) Rechargeable batteries if:

- any of the seals on the battery enclosure of cells are broken or show evidence of tampering.
- the damage or defect is caused by charging or using the battery in equipment or service other than the Product for which it is specified.

H) Freight costs to the repair depot.

I) A Product which, due to illegal or unauthorized alteration of the software/firmware in the Product, does not function in accordance with MOTOROLA’s published specifications or the FCC type acceptance labeling in effect for the Product at the time the Product was initially distributed from MOTOROLA.

J) Scratches or other cosmetic damage to Product surfaces that does not affect the operation of the Product.

K) Normal and customary wear and tear.

VI. PATENT AND SOFTWARE PROVISIONS:

MOTOROLA will defend, at its own expense, any suit brought against the end user purchaser to the extent that it is based on a claim that the Product or parts infringe a United States patent, and MOTOROLA will pay those costs and damages finally awarded against the end user purchaser in any such suit which are attributable to any such claim, but such defense and payments are conditioned on the following:

A) that MOTOROLA will be notified promptly in writing by such purchaser of any notice of such claim;

B) that MOTOROLA will have sole control of the defense of such suit and all negotiations for its settlement or compromise; and

C) should the Product or parts become, or in MOTOROLA's opinion be likely to become, the subject of a claim of infringement of a United States patent, that such purchaser will permit MOTOROLA, at its option and expense, either to procure for such purchaser the right to continue using the Product or parts or to replace or modify the same so that it becomes non-infringing or to grant such purchaser a credit for the Product or parts as depreciated and accept its return. The depreciation will be an equal amount per year over the lifetime of the Product or parts as established by MOTOROLA.

MOTOROLA will have no liability with respect to any claim of patent infringement which is based upon the combination of the Product or parts furnished hereunder with software, apparatus or devices not furnished by MOTOROLA, nor will MOTOROLA have any liability for the use of ancillary equipment or software not furnished by MOTOROLA which is attached to or used in connection with the

Product. The foregoing states the entire liability of MOTOROLA with respect to infringement of patents by the Product or any parts thereof.

Laws in the United States and other countries preserve for MOTOROLA certain exclusive rights for copyrighted MOTOROLA software such as the exclusive rights to reproduce in copies and distribute copies of such Motorola software. MOTOROLA software may be used in only the Product in which the software was originally embodied and such software in such Product may not be replaced, copied, distributed, modified in any way, or used to produce any derivative thereof. No other use including, without limitation, alteration, modification, reproduction, distribution, or reverse engineering of such MOTOROLA software or exercise of rights in such MOTOROLA software is permitted. No license is granted by implication, estoppel or otherwise under MOTOROLA patent rights or copyrights.

VII. GOVERNING LAW:

This Warranty is governed by the laws of the State of Illinois, USA.

Service

Proper repair and maintenance procedures will assure efficient operation and long life for this product. A Motorola maintenance agreement will provide expert service to keep this and all other communication equipment in perfect operating condition. A nationwide service organization is provided by Motorola to support maintenance services. Through its maintenance and installation program, Motorola makes available the finest service to those desiring reliable, continuous communications on a contract basis. For a contract service agreement, please contact your nearest Motorola service or sales representative, or an authorized Motorola dealer.

Express Service Plus (ESP) is an optional extended service coverage plan, which provides for the repair of this product for a period of three years from the date of shipment from the factory, or the date of delivery if purchased from an authorized Motorola two-way radio dealer. For more information about ESP, contact the Motorola Radio Support Center, 2204 Galvin Drive, Elgin, IL 60123, 1-800-227-6772.

Notes

Motorola, Inc.
8000 West Sunrise Boulevard
Ft. Lauderdale, FL 33322

MOTOROLA, the Stylized M Logo, and ASTRO are registered in the U.S. Patent and Trademark Office. All other product or service names are the property of their respective owners.
© Motorola, Inc. 2006.
All rights reserved. Printed in Malaysia.

6871218L01